SHIMANO

TORIUM SA-RB

TOR20PGA

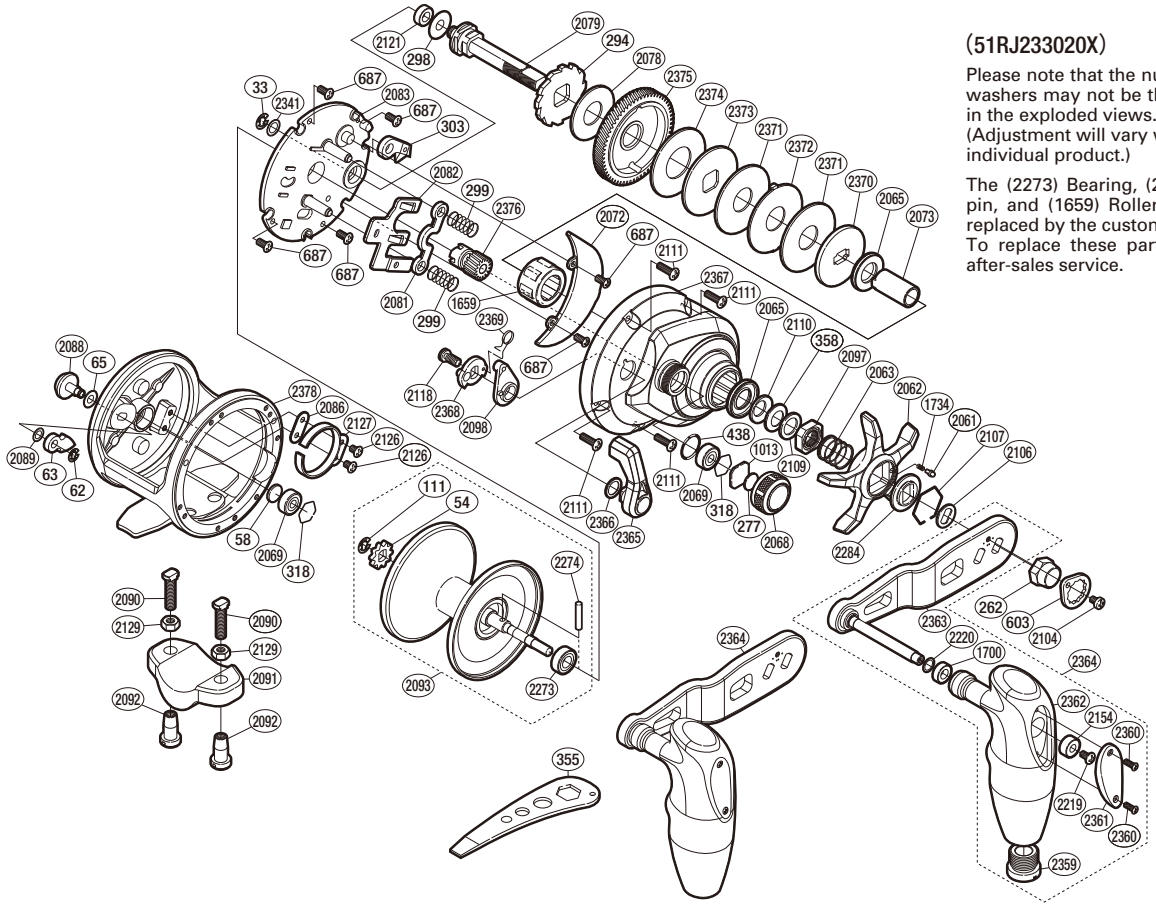

(51RJ233020X)

Please note that the number of adjusting washers may not be the same as shown in the exploded views.
(Adjustment will vary with each individual product.)

The (2273) Bearing, (2274) Spool clutch pin, and (1659) Roller clutch cannot be replaced by the customer.
To replace these parts, please request after-sales service.

Part No.	Description	Part No.	Description	Part No.	Description	
TGT0033	Drive Shaft Retainer	TGT2072	Set Plate Sticker	TGT2284	Star Drag Click Plate	
TGT0054	Click Gear	TGT2073	Roller Clutch Inner Tube	TGT2341	Washer	
TGT0058	Spacer	TGT2078	Drag Washer A	TGT2359	Handle Knob Seal	
TGT0062	E Lock	TGT2079	Drive Shaft	TGT2360	Screw	
TGT0063	Click Pawl	TGT2081	Yoke	TGT2361	Handle Knob Id Plate	
TGT0065	Spacer	TGT2082	Yoke Plate	TGT2362	Handle Knob	
TGT0111	Click Gear Retainer	TGT2083	A Side Plate Set	TGT2363	Handle Shank	
TGT0262	Handle Nut	TGT2086	Click Spring Washer	TGT2364	Handle Assembly	
TGT0277	Cast Control Spacer B	TGT2088	Click Button	TGT2365	Clutch Lever Unit	
TGT0294	Anti-Reverse Ratchet	TGT2089	Washer	TGT2366	Smoother	
TGT0298	Drive Shaft Washer B	TGT2093	Spool Assembly	TGT2367	A Side Plate Assembly	
TGT0299	Yoke Spring	TGT2097	Star Drag Nut	TGT2368	Clutch Cam Unit	
TGT0303	Anti-Reverse Pawl	TGT2098	Eccentric Cam Bushing	TGT2369	Clutch Spring	
TGT0318	Bearing Retainer	TGT2104	Screw	TGT2370	Pressure Plate	
TGT0358	Drag Spring Washer (8L)	TGT2106	Drive Shaft Shield	TGT2371	Drag Washer D	
TGT0438	O Ring	TGT2107	Click Plate Retainer	TGT2372	Eared Washer E	
TGT0603	Handle Nut Plate	TGT2109	Star Drag Spacer	TGT2373	Key Washer C	
TGT0687	Screw	TGT2110	Coned Disc Spring (8H)	TGT2374	Drag Washer B	
TGT1013	Spool Tension Spacer	TGT2111	Screw	TGT2375	Drive Gear	
TGT1659	Roller Clutch Bearing	TGT2118	Screw	TGT2376	Pinion Gear	
TGT1700	Handle Knob Bushing	TGT2121	Drive Shaft Bushing	TGT2378	Frame Assembly	
TGT1734	Click Spring	TGT2126	Screw			
TGT2061	Click Pin B	TGT2127	Click Spring	TGT2090	Rod Clamp Bolt	(Accessory)
TGT2062	Star Drag	TGT2154	Handle Knob Bushing A	TGT2091	Rod Clamp	(Accessory)
TGT2063	Star Drag Spring	TGT2219	Screw	TGT2092	Rod Clamp Nut A	(Accessory)
TGT2065	Roller Clutch Water Proof	TGT2220	Washer	TGT2129	Rod Clamp Nut B	(Accessory)
TGT2068	Cast Control Cap	TGT2273	Ball Bearing			
TGT2069	Ball Bearing	TGT2274	Spool Clutch Pin	TGT0355	Wrench	(Accessory)